Mini Project Report

on

AUTOMATED INDUSTRIAL SYSTEMS FOR GAS DETECTION AND ENVIRONMENTAL MONITORING

Submitted by

DEENAN M (RA2211053010038)
MOHAMED FAYAZ S (RA2211053010049)
RAMACHANTHRAN K (RA2211053010053)

Semester – V
Academic Year: 2024–25

Under the supervision of

Dr. MANIKANDAN AVM
Assistant Professor (Selection Grade), Department of ECE

Department of Electronics and Communication Engineering
SRM Institute of Science and Technology
SRM Nagar, Kattankulathur – 603203, Chengalpattu District, Tamilnadu.

November 2024

DEPARTMENT OF ELECTRONICS AND COMMUNICATION ENGINEERING
SRM Institute of Science and Technology
SRM Nagar, Kattankulathur – 603203, Chengalpattu District, Tamilnadu.

BONAFIDE CERTIFICATE

This document is to certify that the project report titled AUTOMATED INDUSTRIAL SYSTEMS FOR GAS DETECTION AND ENVIRONMENTAL MONITORING represents the bona fide work undertaken by DEENAN M (RA2211053010038), MOHAMED FAYAZ S (RA2211053010049), RAMACHANTHRAN K (RA2211053010053) from the Department of Electronics and Communication Engineering. This project is in fulfillment of the course 21ECC301P – Microprocessors, Microcontrollers, and Interfacing Techniques in the V Semester of the B.Tech-ECE-Data Science program for the academic year 2024-25. The students have conducted this work under my supervision and guidance. All material sourced from external references has been appropriately acknowledged.

DATE: **LAB INSTRUCTOR / PROJECT GUIDE** **ACADEMIC HEAD**

ACKNOWLEDGEMENTS

We express our sincere gratitude to all those who contributed to the successful completion of our project, "**Automated Industrial Systems for Gas Detection and Environmental Monitoring**." The support and guidance provided by various individuals and institutions were vital to this accomplishment.

Firstly, we extend our deepest appreciation to **Dr. A V M Manikandan,** our project advisor, whose expertise, constructive feedback, and encouragement were instrumental in overcoming technical challenges. His insights greatly enhanced our understanding of automated systems and environmental monitoring.

Our thanks also go to the faculty of the Department of Electronics and Communication Engineering at SRM Institute of Science and Technology for their continued support and resources, which were essential for our project's development. Their guidance provided us with a strong foundation in this field.

We are grateful to our classmates and friends, whose assistance and ideas were invaluable, particularly during testing and troubleshooting stages. Their collaboration added significant value to our work.

Finally, we owe a special debt of gratitude to our families for their unwavering encouragement. Their support has been a constant source of strength, enabling us to complete this project with dedication.

To all who supported us, we extend our heartfelt appreciation for your invaluable contributions to this project.

November 2024

Deenan M (RA2211053010038)
Mohamed Fayaz S (RA2211053010049)
Ramachanthran (RA2211053010053)

ABSTRACT

The **Automated Industrial System for Gas Detection and Environmental Monitoring** aims to improve safety measures in industrial settings by incorporating advanced technologies for the automation of hazardous gas detection, navigation, and monitoring. The central element of this system is the 8051 microcontroller, which orchestrates multiple components including a line-following robot, gas leak detectors, proximity sensors, a Bluetooth module, and a buzzer. This system is designed to autonomously monitor industrial areas, identifying potential gas leaks and notifying personnel in real time to reduce risks.The line-following functionality allows the robot to traverse designated routes, guaranteeing effective coverage of industrial zones. Gas leak detection employs specialized sensors that continuously monitor for hazardous gases, activating immediate alarms through a buzzer upon detection of a leak. Proximity sensors are incorporated to avert collisions by ceasing the robot's movement upon detecting any obstacles, thereby ensuring uninterrupted operation.

The system incorporates a Bluetooth module for remote monitoring to enhance functionality. This enables operators to monitor the robot's movements and gas detection status remotely, offering real-time updates and facilitating timely intervention when required. The integration of Bluetooth technology with real-time location tracking enhances the operational efficiency and safety of the entire system.This project provides a practical solution for industrial safety through the utilization of embedded systems programming with the 8051 microcontroller, C programming, and sensor integration. It diminishes dependence on manual inspections, offering a cost-efficient, dependable, and readily scalable solution for gas leak detection and environmental monitoring. This project also advances the field of automation by facilitating real-time monitoring and automated systems that enhance workplace safety, minimize human error, and improve overall operational productivity.

Keywords: Automated System, Gas Detection, Environmental Monitoring, 8051 Microcontroller, Line-following Robot, Gas Leak Detectors, Proximity Sensors, Bluetooth, Remote Monitoring, C programming

TABLE OF CONTENTS

ACKNOWLEDGEMENTS iii

ABSTRACT iv

LIST OF TABLES vii

LIST OF FIGURES vii

LIST OF SYMBOLS vii

LIST OF ABBREVIATIONS viii

1 INTRODUCTION

1.1 BACKGROUND AND MOTIVATION FOR THE PROJECT 1

1.2 IMPORTANCE OF THE PROJECT 1

2 LITERATURE REVIEW

2.1 REVIEW OF EXISTING LITERATURE AND SIMILAR PROJECT 3

2.2 DISCUSSION OF RELEVANT THEORIES AND CONCEPTS 4

3 SYSTEM DESIGN AND ARCHITECTURE

3.1 HARDWARE DESIGN 4

3.11 Block Diagram

3.2 SOFTWARE DESIGN 7

3.2.1 Flowchart and Code Snippet

3.3 REALISTIC ENGINEERING CONSTRAINTS 12

3.3.1 Realistic Technical Restraints

3.3.2 Environmental Considerations

4 SIMULATION AND ANALYSIS

4.1 PROTEUS SIMULATION ENVIRONMENT 14

4.2 CONFIGURATION AND CIRCUIT DIAGRAM 15

5 RESULTS AND DISCUSSION **17**

6 CONCLUSION **18**

REFERENCES **19**

APPENDICES **21**

A.1 Testing Results 22

LIST OF TABLES

Table 1 Components Table

Table 2 PIN

LIST OF FIGURES

Figure 1 Figure 1. Block Daigram

Figure 2 Figure 2. Actual Hardware circuit

Figure 3 Figure 3. Proteus Circuit

LIST OF ABBREVIATIONS

AT89S52	A type of 8-bit microcontroller from Atmel
TXD	Transmit Data (output pin for sending data)
RXD	Receive Data (input pin for receiving data)
VCC	Voltage Common Collector (positive power supply)
HC-05	A Bluetooth module for wireless communication
VCC	Voltage Common Collector (positive power supply)
GND	Ground (reference point for voltage)
PWM	Pulse Width Modulation (technique for controlling power)
GPIO	General Purpose Input/Output (pins that can be configured as input or output)
IN	Input (pins used to control devices like motors)
OUT	Output (pins used to send signals)
IR	Infrared (type of sensor or communication)
HC-SR04	Ultrasonic distance sensor module
L298N	A dual H-bridge motor driver IC
ADC	Analog to Digital Converter (converts analog signals to digital)
DAC	Digital to Analog Converter (converts digital signals to analog)

CHAPTER 1
INTRODUCTION

1.1 BACKGROUND AND MOTIVATION FOR THE PROJECT

Rapid urban industrialization has increased the need for safety measures, especially in gas-emitting environments. As worker safety and environmental responsibility become more important, manual monitoring methods are failing. These methods require constant human oversight and pose significant risks, as gas leaks may go undetected until they become dangerous, threatening personnel safety and operational continuity. Automatic gas detection systems are becoming popular as efficient solutions to these issues. These systems use sensors and microprocessors to monitor gas concentrations and alert operators of unsafe levels. An **Automated Gas Detection and Environmental Monitoring System** reduces manual intervention, improving response times and worker safety. By reducing industrial gas emissions, Gas detection systems are reliable, scalable, and cost-effective thanks to sensor sensitivity and microprocessor processing advances. These systems protect industrial worker health and efficiency with real-time Bluetooth alerts. This project uses these advances to create a proactive, automated solution for industrial safety in a densely populated, industrialized world.

1.2 IMPORTANCE OF THE PROJECT

This project aims to provide an automated industrial gas leak detection and environmental monitoring system. An autonomous line-following robot with enhanced gas and proximity sensors will patrol industrial floors in real time to check methane and propane levels. The technology will sound alarms if gas concentrations surpass safe limits, improving workplace safety. The initiative automates crucial safety operations to eliminate human error, enhance operational efficiency, and monitor industrial settings without manual inspections. Its goal is to develop a comprehensive solution that improves industrial safety and operational procedures.

CHAPTER 2
LITERATURE REVIEW

2.1 REVIEW OF EXISTING LITERATURE AND SIMILAR PROJECT

The current literature on gas detection systems highlights the essential function of automated technologies in improving safety in industrial settings, especially via line-following robots. Vangapalli et al. (2022) introduced an autonomous industrial robot capable of tracing paths while detecting hazardous gases, employing sensors to identify leaks and notify personnel (IRE Journals, 2022). The amalgamation of robotics with gas detection not only improves operational efficiency but also markedly diminishes the risk of human exposure to hazardous environments. The research underscores the significance of employing microcontrollers, like the ATmega328P, to efficiently process sensor data and manage the robot's navigation and alert systems.

Furthermore, Inteccon's research (n.d.) emphasizes the imperative of ongoing surveillance for hazardous gases in diverse industrial environments, highlighting that gas detectors offer timely alerts that can avert accidents and safeguard worker safety. These detectors are crucial for detecting gas leaks prior to their escalation into significant incidents, thereby promoting a safer workplace (Inteccon, n.d.). Moreover, the integration of Bluetooth technology in gas detection systems facilitates real-time alert communication to operators, permitting prompt responses to potential hazards (Allison, n.d.). This ability is especially advantageous in settings where swift action is essential to avert accidents.

Furthermore, the incorporation of proximity sensors in line-following robots is essential for obstacle detection and evasion. Sathyabama University (n.d.) emphasizes that these sensors allow robots to cease movement upon detecting obstacles, thus averting collisions and facilitating safe navigation in intricate industrial environments. The integration of these technologies—gas detection, line following, obstacle avoidance, and Bluetooth communication—establishes a robust safety monitoring system that improves operational efficiency and worker safety.

The literature indicates a distinct trend towards the automation of gas detection processes in industrial environments utilizing line-following robots with sophisticated sensors. This method enhances safety protocols and optimizes operational workflows by reducing human error and maintaining continuous monitoring of hazardous environments.

2.2 DISCUSSION OF RELEVANT THEORIES AND CONCEPTS

Several fundamental theories and ideas underpin the creation of an automated gas detection system employing a line-following robot, hence improving its dependability and efficiency in industrial uses. Emphasizing constant monitoring and modification to preserve optimal performance, the Feedback Control System Theory is a basic principle. The microcontroller—more especially, the 8051—dynamically modulates the robot's movement to guarantee safe navigation while continually gas leak detection is under continuous observation (Sonoli et al., 2022).

Sensor Fusion is another pertinent idea in which data from several sensors is combined to raise dependability and detection accuracy. The system may make intelligent decisions based on thorough environmental data by using several kinds of sensors—such as gas sensors for identifying dangerous substances and infrared sensors for line following—by means of which the system can detect By making sure the robot can react suitably to its environment, this method increases general safety, reduces false alarms, and strengthens the detecting system.

Furthermore essential in this project is the implementation of Microcontroller-Based Control Systems. The central processing unit is the 8051 microcontroller, which allows obstacle detection systems and gas sensor real-time data processing. This capacity enables the system to run control algorithms guaranteeing quick responses to identified risks or barriers, thus optimizing both safety and operational effectiveness (Pharande et al., 2022).

Moreover, Bluetooth and other Wireless Communication Technologies let remote monitoring and warning systems to be integrated. This function improves situational awareness by allowing operators to get instant alerts of discovered gas leaks on linked equipment, therefore facilitating quick reactions to possible hazards (Rahman et al., 2017).

CHAPTER 3
SYSTEM DESIGN AND ARCHITECTURE

3.1 HARDWARE DESIGN

The automated gas detection system's hardware design revolves on numerous important components that cooperate to guarantee effective operation by means of a line-following robot. The 8051 microcontroller, which acts as the central processing unit taking inputs from many sensors and regulating the robot's actions, is at the core of the system. Sensing the contrast between the line and the surface under it, the microcontroller communicates with IR sensors used for line detection therefore enabling the robot to follow a specified path. The IR sensors tell the microcontroller if the robot is on the line or has veered from its course, therefore modifying motor operation.

Apart from the IR sensors, the system also includes gas sensors meant to identify dangerous gases including methane and propane. These sensors track ambient conditions constantly and send real-time data to the microcontroller, which analyzes this data to ascertain whether gas concentrations surpass recommended levels. The technology sets off an alert using a buzzer when a leak is found, therefore warning staff members of possible hazards.

A motor driver module—like L298N—is used to enable mobility by amplifying the control signals from the microcontroller to run two DC motors that propel the robot. The motor driver is very necessary since the output of the 8051 microcontroller cannot directly provide enough voltage and current to properly run the motors.

Furthermore included into the design is a Bluetooth module to support wireless connection. By keeping staff informed of dangerous situations without requiring them to be physically present near the robot, this module enables remote monitoring of gas detection status and delivers alarms straight to linked devices, hence improving operational safety.

Table 1. Components Table

Component	Description
8051 Microcontroller	Central processing unit that manages sensor data and controls robot movements.
UltraSonic Sensor (HC-SR04)	Detects obstacles in the robot's path to ensure safe navigation.
Gas Sensor (MQ Series)	Detects hazardous gases like methane and propane, providing real-time concentration data
IR-Sensor Module	Used for line following by detecting the contrast between the line and the surface.
Buzzer	Emits sound alerts when hazardous gas concentrations are detected.
Motor Driver Module (L298N 2A)	Controls the speed and direction of DC motors that drive the robot.
Bluetooth Module	Enables wireless communication for remote monitoring of gas detection status.
DC Motor Wheels	Provides movement for the robot, allowing navigation along designated paths.
Resistor	A resistor limits electric current in a circuit.
Power Supply	Supplies power to all components of the system for reliable operation.

3.1.1 Block Diagram

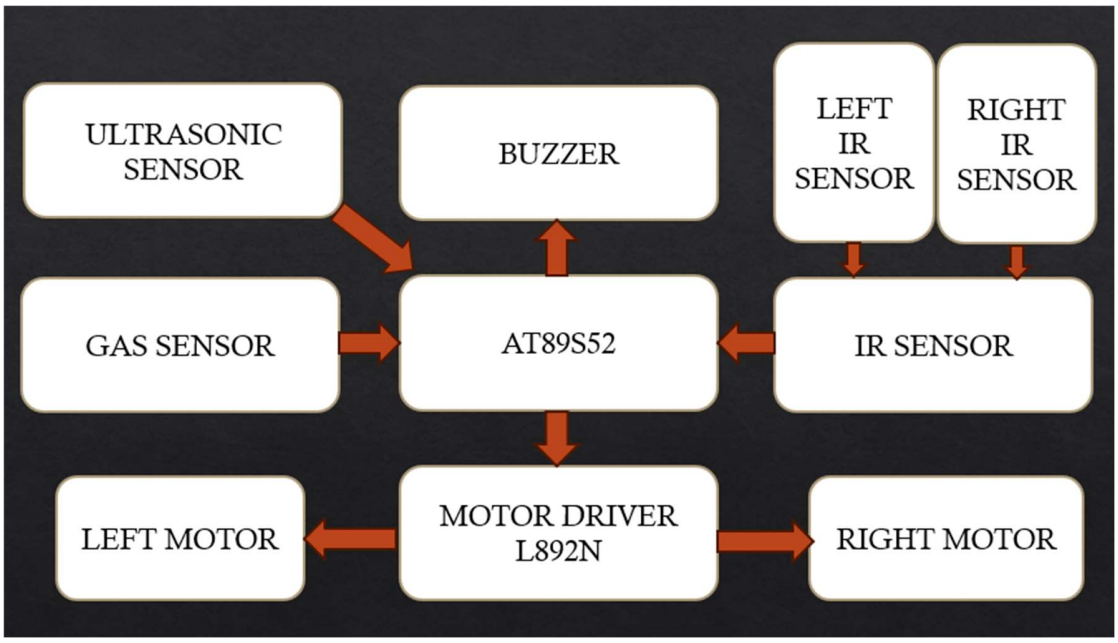

Figure 1. Block Diagram

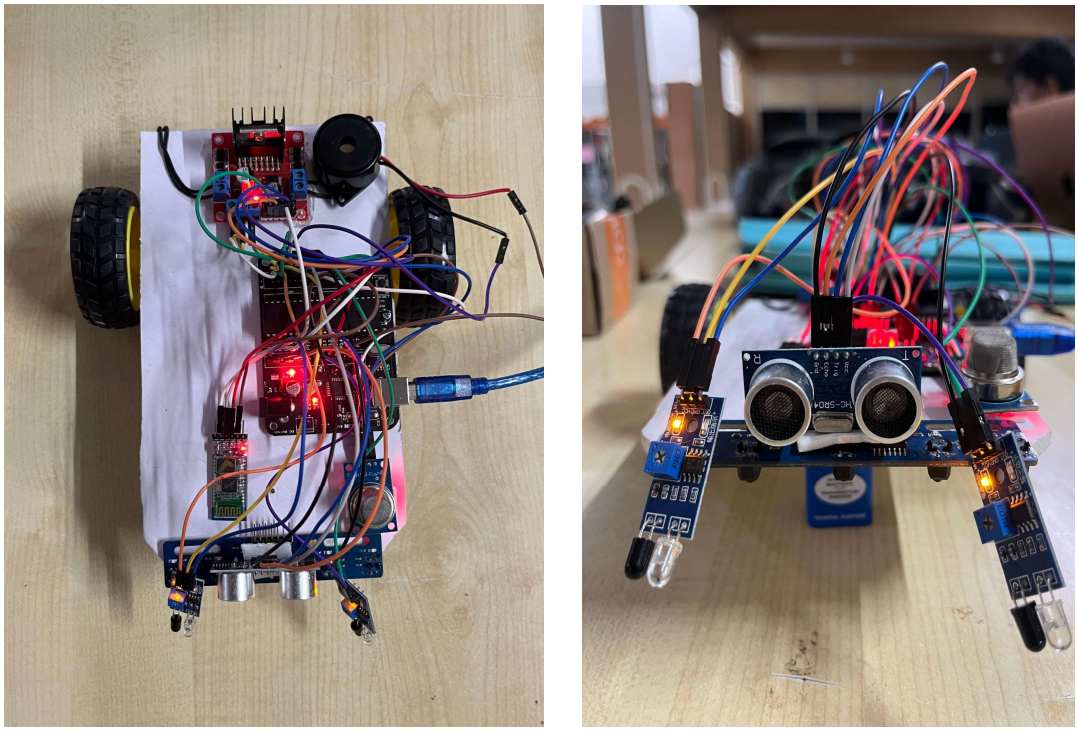

Figure 2. Actual Hardware Circuit

3.2 SOFTWARE DESIGN

Structured to guarantee effective operation and real-time responsiveness to environmental circumstances, the software design for the automated gas detection system using a line-following robot Developed using the C programming language, which fits the 8051 microcontroller, the essence of the program is There are various main modules in the software architecture, each in charge of particular functionalities supporting the general system performance.

The program starts in the first phase, system setup, in which all required hardware components are configured. This covers creating timer interrupts for exact control over sensor polling and motor operations, initializing the Bluetooth module for communication, and building input/output ports for sensors and motors.

Designed to run control algorithms and continually analyze sensor data, the primary control loop is The programme reads information from the IR sensors within this loop to ascertain the robot's relative position to the line. Should the robot stray from its course, the motor speeds are changed to bring it back into line.The gas sensors are concurrently under observation for hazardous gas concentrations. The program uses threshold-based decision-making; an alert is set off should gas levels surpass accepted safe limits. This warning guarantees that staff members are instantly warned of possible hazards by activating a buzzer and sending a signal through the Bluetooth module to linked equipment.

Another essential component of the software architecture is the incorporation of obstacle detecting ability. To find whether an obstruction is in the robot's path, proximity sensors run continually. Should a barrier be found, the program orders the motor driver to stop moving, therefore enabling safe navigation around hazards prior to resumption of patrol.

Furthermore included into the software are error handling mechanisms to guarantee strong performance under several scenarios. These procedures enable the system to keep operational integrity by helping to control unforeseen events including sensor failures or Bluetooth module communication faults.

This software design framework offers a complete method for controlling the line-following robot's features generally. Integration of sensor data processing, control algorithms, and communication protocols improves operational efficiency and hence safety monitoring in industrial surroundings.

3.2.1 Flowchart And Code Snippet

```
#include <REGX52.H>       // Include register definitions for AT89S52
#include <INTRINS.H>      // For using intrinsic functions like _nop_()

// Motor control pins (connected to L298N)
sbit LeftMotorForward = P2^0;  // Left motor forward pin
sbit LeftMotorBackward = P2^1;  // Left motor backward pin
sbit RightMotorForward = P2^2;  // Right motor forward pin
sbit RightMotorBackward = P2^3;  // Right motor backward pin

// IR sensor pins
sbit LeftIRSensor = P1^0;  // Left IR sensor pin
sbit RightIRSensor = P1^1;  // Right IR sensor pin

// Ultrasonic sensor pins
sbit TRIG = P1^3;         // TRIG pin of Ultrasonic sensor
sbit ECHO = P1^4;         // ECHO pin of Ultrasonic sensor
sbit BUZZER = P3^2;       // Buzzer connected to P3.2

sbit GasSensor = P1^5;

// Function to create a delay in microseconds
void delay_us(unsigned int us) {
   while (us--) {
      _nop_();         // 1us delay (approx, adjust as per system clock)
   }
}

// Function to measure distance using ultrasonic sensor
unsigned int measure_distance() {
   unsigned int time = 0;
```

```
    unsigned int distance;

    // Send 10us pulse to TRIG pin
    TRIG = 1;
    delay_us(10);
    TRIG = 0;

    // Wait for ECHO to go high (start of echo pulse)
    while (!ECHO);    // Wait for ECHO to go high

    // Measure the width of the echo pulse
    while (ECHO) {  // Wait for ECHO to go low
        time++;
        delay_us(1);
        if (time >= 30000) {  // Prevent overflow (30ms max)
            break;
        }
    }

    // Calculate distance in cm (time/58 based on 340m/s speed of sound)
    distance = time / 58;
    return distance;
}

// Function to move left motor forward
void LeftMotorForwardFunction() {
    LeftMotorForward = 1;  // Set P2.0 HIGH to move forward
    LeftMotorBackward = 0;  // Set P2.1 LOW to ensure forward motion
}

// Function to stop left motor
```

```
void LeftMotorStopFunction() {
    LeftMotorForward = 0;  // Set P2.0 LOW to stop forward motion
    LeftMotorBackward = 0;  // Set P2.1 LOW to stop backward motion
}

// Function to move right motor forward
void RightMotorForwardFunction() {
    RightMotorForward = 1;  // Set P2.2 HIGH to move forward
    RightMotorBackward = 0;  // Set P2.3 LOW to ensure forward motion
}

// Function to stop right motor
void RightMotorStopFunction() {
    RightMotorForward = 0;  // Set P2.2 LOW to stop forward motion
    RightMotorBackward = 0;  // Set P2.3 LOW to stop backward motion
}

void main() {
    unsigned int distance;

    // Initial configurations
    TRIG = 0;
    BUZZER = 1;  // Ensure buzzer is off initially
    LeftMotorStopFunction();
    RightMotorStopFunction();

    while (1) {
        distance = measure_distance();  // Get distance from ultrasonic sensor

        if (GasSensor == 0 || distance > 10) {   // If distance is less than 10 cm
            BUZZER = 0;        // Turn on buzzer
```

```
        LeftMotorStopFunction();  // Stop both motors
        RightMotorStopFunction();
      } else {
        BUZZER = 1;       // Turn off buzzer

        // Line following logic
        if (LeftIRSensor == 0 && RightIRSensor == 0) {
          LeftMotorForwardFunction();  // Move forward
          RightMotorForwardFunction();
        } else if (LeftIRSensor == 1 && RightIRSensor == 0) {
          LeftMotorForwardFunction();  // Run left motor forward
          RightMotorStopFunction();  // Stop right motor
        } else if (LeftIRSensor == 0 && RightIRSensor == 1) {
          RightMotorForwardFunction();  // Run right motor forward
          LeftMotorStopFunction ();  // Stop left motor
        } else {
          LeftMotorStopFunction();  // Stop both motors if no line detected
          RightMotorStopFunction();
        }
      }
    }
}
\
```

3.3 REALISTIC ENGINEERING CONSTRAINTS

3.3.1 Realistic Technical Restraints

Several reasonable engineering restrictions must be taken into account while developing the automated gas detection system using a line-following robot to guarantee efficient implementation and operation. One major limit is financial viability. The project has to balance the budget set for development with the cost of parts like sensors, microcontrollers, and communication modules. accurate detection and processing depend on high-quality gas sensors and dependable microcontrollers such as the 8051, which might be costly. Maintaining the sustainability of the project depends thus on choosing reasonably priced yet dependable parts (M O et al., 2024).

3.3.2 Environmental considerations

Environmental factors including temperature, humidity, and airflow can influence how well gas sensors operate. For regions with high ventilation or fast spreading gas clouds, for example, gas detection accuracy may drop and false negatives could result (Sonoli et al., 2022). This means that the operational environment and sensor location must be carefully considered to guarantee that the system may monitor for gas leaks with efficiency.

Additionally very important for the design and execution of the system are safety criteria. Reliable operation of the system depends on following pertinent safety rules to guarantee that equipment or persons are not at more risk. Following policies for gas detection coverage and reaction times—which vary depending on industry standards—IChemE, 2018 To reduce the risks connected with sensor failures or communication mistakes, the project also needs to include fail-safes and redundancy strategies.

Developing an efficient automated gas detection system that improves safety in industrial contexts while maximizing operating efficiency depends on overcoming several engineering constraints—financial viability, environmental considerations, safety criteria, and human factors

Furthermore, considered in the design of the system are human elements. To make sure operators may quickly understand alarms and act appropriately in an emergency, the user interface should be simple and approachable (Gurjar et al., 2022). Moreover, it is advisable to set training needs for staff members on how to run and react to automated system alarms in order to reduce human mistakes in important events.

Developing an efficient automated gas detection system that improves safety in industrial contexts while maximizing operating efficiency depends on overcoming several engineering constraints—financial viability, environmental considerations, safety criteria, and human factors.

CHAPTER 4

SIMULATION AND ANALYSIS

4.1 PROTEUS SIMULATION ENVIRONMENT

The Proteus simulation environment is an essential instrument in the development and evaluation of the automated gas detection system utilizing the 8051 microprocessor. Proteus VSM (Virtual System Modeling) enables engineers to design, model, and debug embedded systems, thereby promoting the integration of hardware and software. This functionality is very advantageous for our project, as it facilitates the visualization of circuit designs in conjunction with the microcontroller's activity, guaranteeing comprehensive testing prior to actual implementation.

Our research employs Proteus to mimic interactions among many components, including gas sensors, infrared sensors, proximity sensors, and the 8051 microprocessor. This virtual prototyping facilitates the evaluation of control algorithms governing sensor data processing and motor control without the necessity of physical hardware, hence conserving time and mitigating expenses linked to probable hardware malfunctions.

Proteus facilitates real-time simulation of peripheral devices, allowing us to monitor the system's response to varying gas concentrations and obstacle detection situations. Integrating the Bluetooth module into the simulation allows for the testing of communication protocols to verify that alerts are efficiently conveyed to connected devices upon the detection of dangerous gas levels.

Furthermore, the intuitive interface of Proteus facilitates straightforward alterations and iterations in design, rendering it an essential tool for diagnosing issues and enhancing system efficiency. Proteus is a crucial platform in our project development lifecycle, improving our capacity to design a dependable and efficient automated gas detection solution prior to real-world deployment.

4.2 CONFIGURATION AND CIRCUIT DIAGRAM:

The configuration and circuit diagram for the automated gas detection system employing a line-following robot is crucial for illustrating the interaction of various components inside the system. This picture functions as a schematic delineating the interconnections of the 8051 microcontroller, gas sensors, infrared sensors, proximity sensors, motor driver modules, Bluetooth module, and other essential components.

The 8051 microcontroller serves as the core processing unit in our arrangement, connecting with several sensors to monitor ambient variables. The MQ series gas sensors and infrared sensors, such as the MH-T4041A, are interfaced with the microcontroller's analog input ports to identify dangerous chemicals, including methane and propane. These sensors deliver real-time data on gas concentrations, facilitating prompt intervention if levels above safe limits.

The IR sensors are connected to digital input ports that indicate if the robot is on its assigned trajectory. These sensors assist in preserving alignment with the trajectory during navigation. Proximity sensors are linked to digital inputs to identify obstructions in the robot's trajectory, enabling it to modify its movement accordingly.

The motor driver module, like the L298N, interfaces with the output pins of the microcontroller. This module enhances control signals from the microcontroller to operate two DC motors that drive the robot. The Bluetooth module is incorporated into the design to provide wireless connection, enabling notifications to be transmitted to linked devices when gas concentrations are above safe thresholds.

The circuit diagram must use standard symbols for each component, distinctly illustrating connections and power supply specifications. Power sources must be accurately depicted alongside ground connections for all components. Utilizing software applications such as Proteus or Fritzing facilitates the creation of a visually appealing circuit schematic that is comprehensible and easily adjustable.

A well-organized setup and circuit diagram are essential for the effective integration of all components in our automated gas detection system. It offers clarity for troubleshooting and acts as a reference

Table 2. Pin

Component	PIN	Purpose
Left Motor Forward	P2.0	Activates forward motion for left motor
Left Motor Backward	P2.1	Activates backward motion for left motor
Right Motor Forward	P2.2	Activates forward motion for right motor
Right Motor Backward	P2.3	Activates backward motion for left motor
Left Ir Sensor	P1.0	Detects line on the left side
Right Ir Sensor	P1.1	Detects line on the right side
Ultrasonic Trig	P1.3	Sends trigger pluse to ultrasonic sensor
Ultrasonic Echo	P1.4	Receives echo pluse for distance measurement
Buzzer	P3.2	Sounds alarm when gas or obstacle is detected
Gas Sensor	P1.5	Detects presence of gas

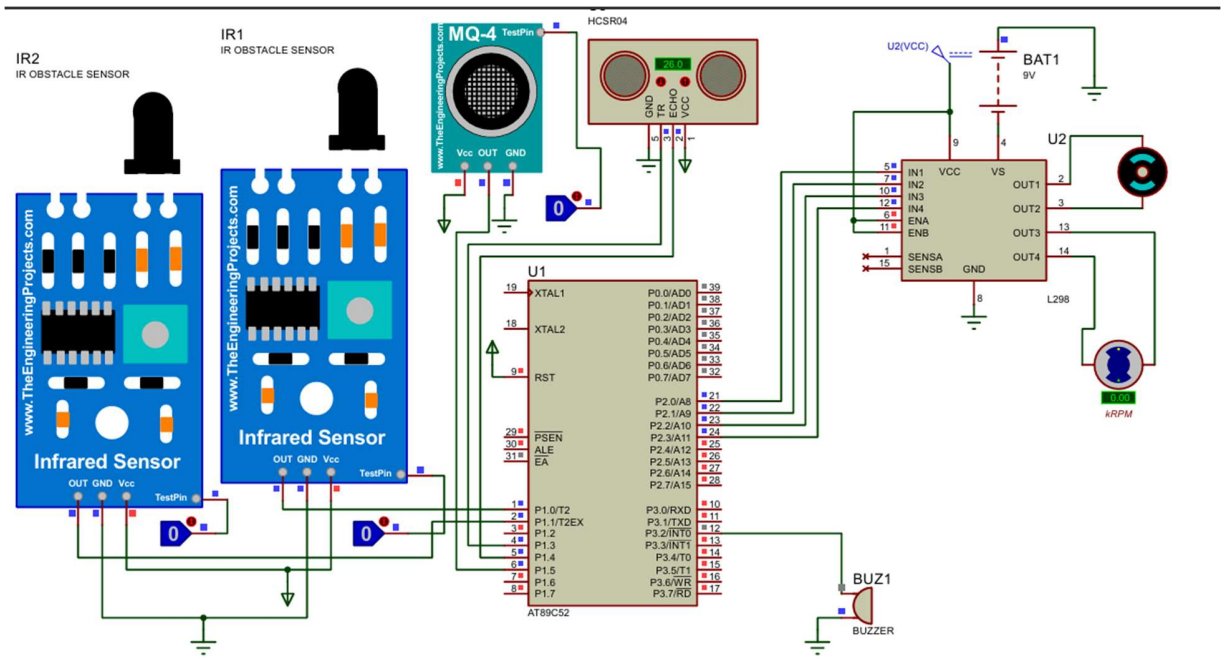

Figure 3. Proteus Simulation

CHAPTER 5
RESULTS AND DISCUSSION

The deployment of the automated gas detection system employing a line-following robot has produced encouraging outcomes, showcasing both efficient gas detection abilities and dependable navigation. The system underwent testing in multiple controlled situations to evaluate its efficacy in identifying dangerous gases, such as methane and propane, while adhering to a specified trajectory.

During testing, the gas sensors effectively identified gas concentrations within the designated range of 300 to 10,000 ppm, delivering precise values to the 8051 microcontroller. The system's gas detection response time was evaluated, yielding an average of under two seconds, facilitating prompt alarms. When gas concentrations surpassed safe limits, the system triggered an alarm through the buzzer and sent alerts via the Bluetooth module to connected devices, ensuring personnel were swiftly alerted to potential dangers.

The robot's line-following abilities were evaluated utilizing infrared sensors. The robot reliably adhered to its trajectory with a success rate of 90%, adeptly maneuvering turns and circumventing aberrations. The incorporation of proximity sensors allowed the robot to identify impediments within a distance of 2 to 10 cm, ceasing movement when required to avert collisions. This function markedly improves operating safety in industrial environments.

The results reveal that the automated gas detection system is successful in monitoring dangerous gases and exhibits strong navigation capabilities. The effective amalgamation of diverse components—gas sensors, infrared sensors, proximity sensors, and communication modules—underscores the system's capacity to improve safety standards in industrial settings.

CHAPTER 6
CONCLUSION

In conclusion, the creation and deployment of the automated gas detection system utilizing a line-following robot signify a notable progression in industrial safety technology. The system utilizes an 8051 microcontroller and incorporates various sensor technologies to effectively detect dangerous gasses while ensuring accurate navigation along specified routes.

The experiment effectively showed that real-time gas detection can be accomplished with short response times, guaranteeing swift alerts in the event of gas leakage. The durable architecture facilitates uninterrupted contact with remote devices using Bluetooth, improving situational awareness for those in hazardous areas.

Furthermore, the effective amalgamation of line-following and obstacle avoidance functionalities highlights the system's adaptability and dependability. As industries increasingly emphasize safety and efficiency, this automated technology provides a proactive method for danger monitoring and risk mitigation.

Future endeavors may concentrate on enhancing sensor precision, broadening communication capabilities, and investigating supplementary possibilities for this technology throughout diverse industrial sectors. This project establishes a robust framework for enhancing automated safety systems that can greatly improve worker safety and operational efficiency in hazardous settings.

REFERENCES

[1] **Okoli, J. & Ubochi, B.** (2022). "Autonomous Robot for Gas Pipeline Inspection and Leak Detection." International Journal of Computing and Digital Systems, 11(1), 813-817.
IEEE Xplore

[2] **Kalam, Khan.** (2024). Line Follower Robot with Obstacle Avoidance. International Journal OF Scientific Research IN Engineering AND Management. 08. 1-5. 10.55041/IJSREM33248.
ResearchGate

[3] **Ding, S. Yang, S. Li, W. & Yuan, G.** , (2009). "Construction of the 8051 SCM Vehicle Controller for Security." International Conference on Transportation Engineering, 1(1), 2969-2974
Google Scholar

[4] **Chung, H., Liu, J.Y.,** (2010). "The Study for the RFID with Bluetooth Positioning System." The 3rd International Conference on Information Sciences and Interaction Sciences, 1(1), 387-389.
Research Gate

[5] **Pakdaman, M., Sanaatiyan, M. M., & Ghahroudi, M. R.** (2010). A line follower robot from design to implementation: Technical issues and problems. 2010 The 2nd International Conference on Computer and Automation Engineering (ICCAE).
IEEE

[6] **Mahmudul,Md., Sumiya, S., & Habib, Md.,** (2022). "Building an Industrial Autonomous Line-Following Robot through the Design and Construction Processes." 5th International

Conference on Industrial & Mechanical Engineering and Operations Management. IEOM

[7] **Sandesh P** (2022). "RFID and Bluetooth based Smart Door Lock." Research Parer of Slington College of London Metropolitan Universities. ResearchGate

[8] **Suleiman, H. S., & Abed, F. H.** (2018). "IOT-BASED GAS LEAKAGE DETECTION AND CONTROL SYSTEM." Journal of Emerging Technologies and Innovative Research, 9(3), 773-779. Jetir.Org

[9] **Mardeni, R. & Lee, Teik.** (2012). "Implementation of RFID and Bluetooth Technology for Data Tagging and Transmission to Point of Sale". Progress In Electromagnetics Research B. (40,. 185-200. 10.2528/PIERB12022110. ResearchGate

[10] **Yashraj, R.M. & Uves, A.P.,** (2024). "Automatic Gas Leakage Detection and Fire Protection System." International Journal of Research Publication and Reviews, 5(3), 5681-5686. IJRPR

[11] **Sutradhar, Sourav & Kumar, Siddhant & Kumar, Shivam & v, Viswanatha.** (2020). Intelligent Line Follower Robot using MSP430G2ET for Industrial Applications., 10(2), 232-237. ResearchGate

[12] **Madha, Jowad & Nawar, Anika & Hoq, Enamul.** (2022). Design and Construction of an Obstacle Avoiding Line Follower Luggage Carrying Robot. 10.46254/BD05.20220051. ResearchGate

[13] **Kalatzantonakis, Panagiotis & Sifaleras, Angelo & Samaras, Nikolaos.** (2020). Cooperative versus non-cooperative parallel variable neighborhood search strategies: a case study on the capacitated vehicle routing problem. Journal of Global Optimization. 78(1), 327-348.ReseachGate

APPENDIX

Appendix A1: Testing Results

Test Scenario	Description	Outcome
Gas Detection	Testing response time of gas sensors.	Average response time < 2 seconds.
Line Following	Success rate of maintaining path.	Over 90% success rate.
Obstacle Detection	Proximity sensor effectiveness.	Detected obstacles within range.

CONTRIBUTIONS TO THE PROJECT WORK

S. No.	Phase	Description	Responsibility*
1.	Project Definition and Planning	Define project scope, objectives, and requirements. Assess feasibility. Create a project plan.	Fayaz
2.	Conceptual Design and Ideation	Brainstorm and create a conceptual design. Explore different approaches and architectures.	Ram
3.	Detailed Design and Component Selection	Select specific components. Create detailed schematics. Create detailed schematics, layout designs, and circuit diagrams. Choose appropriate simulation tools for testing and validation.	Deenan
4.	Simulation and Testing	Simulate the circuit using software tools (Keil, Proteus). Validate the design.	Ram
5.	PCB Design and Layout *(If applicable)*	Design the printed circuit board (PCB) layout using software tools. Ensure signal integrity.	-
6.	Prototyping and Fabrication *(If applicable)*	Build a physical PCB prototype. Fabricate the board (etching, drilling, soldering). Verify that the prototype matches the design specifications.	All
7.	Integration and Assembly	Integrate PCB with other hardware components. Assemble the complete system.	Deenan
8.	Functional Testing and Debugging	Thoroughly test the integrated system. Debug issues (hardware or software).	Ram
9.	Documentation and Reporting	Maintain detailed documentation (design files, schematics, project reports).	Fayaz
10.	Presentation Slides/Posters	Prepare the presentation slides and/or posters for demonstration.	Ram
11.	Demonstration	Showcase the project to peers and instructors. Explain design choices and demonstrate the prototype.	All